rogerblack

SILVER TREADMILL **AG-12301**

fit for life

with Roger Black

BEFORE YOU BEGIN

Congratulations for selecting the AG-12301 Treadmill from Roger Black. Whether you are an accomplished athlete seeking to maintain peak performance or a beginner realizing the benefits of exercise for the first time, the AG-12301 Treadmill will help you to achieve your goals. In the “Hints to Help You” section of this manual we have outlined some tips that we hope will help you maximize the effectiveness and fun of your workouts.

In the meantime, remember that the benefits of exercise are many and varied including higher energy levels, reduced stress, improved self-esteem, clearer and more radiant skin, greater cardiovascular efficiency, higher metabolic rate, and improved body posture – all of which can result in a longer and more enjoyable life.

While purchasing the AG-12301 Treadmill will not do all of this alone, it is an important step towards understanding and achieving the benefits of exercise.

All Roger black products are manufactured to the highest specifications and this instruction manual should enable you to assemble the AG-12301 Treadmill and commence your workout program. If, however, you have any additional questions, please call out UK Customer Service on +44 (0) 845 600 0464. To help us assist you, please quote the product model number and batch number when calling. The model number is AG-12301. The serial number can be found on a sticker attached to the Roger black AG-12301 (located on the left hand side of the treadmill base next to the mains power cord inlet).

Opening Carton/Assembling Your Product

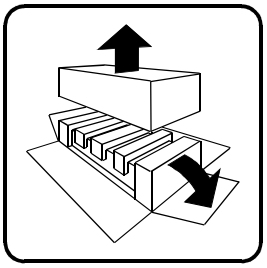

1. REMOVE TOP, CUT SIDES AND FOLD DOWN.

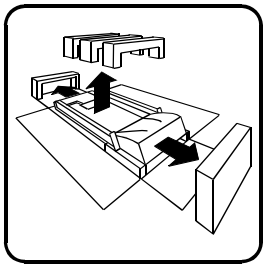

2. REMOVE FOAM FROM TOP AND ENDS.

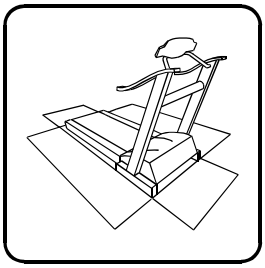

3. ASSEMBLE TREADMILL AND PLUG IN POWER.

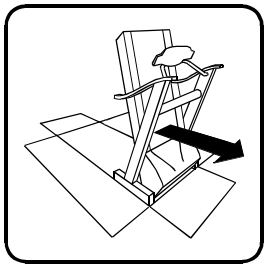

4. FOLD UP AND ROLL AWAY.

CONTENTS

Before you Begin	01
Precautions	03
Hardware Pack	04
Parts List	05
Exploded Diagrams/Part Identification	08
Assembly Instructions	16
Folding instructions	19
Unfolding instructions	20
Transport instructions	21
Locking Pin	22
Computer instructions	23
Stretching routine	27
Limited Warranty	29
How to maintain the AG-12301 treadmill	30
Troubleshooting	32
Ordering replacement parts	33

Warning

Before beginning this or any exercise programme, consul your physician. This is especially important for persons who have not exercised regularly before or persons with pre-existing health problems. Read all instructions before using. Argos assumes no responsibility for personal injury or property damage sustained by or through the use of this product.

Questions?

As a manufacturer, we are committed to providing complete customer satisfaction. If you have any questions, or if parts are missing or damaged, we guarantee complete satisfaction.

TO AVOID UNNECESSARY DELAYS, PLEASE CALL OUR CUSTOMER HOTLINE DIRECT. The trained technicians on our customer hotline will provide immediate assistance free of charge.

UK Customer Hotline: 0 845 600 0464
UK Email: support@rogerblackfitness.co.uk

Caution

Read all precautions and instructions in this manual before using this equipment. Keep this manual for future reference.

Model No: AG-12301
Serial No: for example : AG-12301/0507/000001

Write the serial number and mfr date in the space above for future reference. (Located on the left hand side of the treadmill base next to the mains power cord inlet.)

PRECAUTIONS

WARNING: To reduce the risk of burns, fire, electric shock, or injury to persons, read the following important precautions and information before operating the treadmill.

1. It is the responsibility of the owner to ensure that all users of this treadmill are adequately informed of all warnings and precautions.
2. Use the treadmill only as described in this manual.
3. Place on a level surface, with 2m of clearance behind it. To protect the floor or carpet from damage, place a mat under the treadmill.
4. When choosing a location for the treadmill make sure that the location and position permit access to a plug.
5. Keep the treadmill indoors, away from moisture or dust. Do not put the treadmill in a garage or covered patio, or near water.
6. Do not operate the treadmill where aerosol products are used or where oxygen is being administered.
7. Keep children under the age of 12 and pets away from the treadmill at all times.
8. The treadmill should not be used by persons weighing more than 100kg.
9. Never allow more than one person on the treadmill at a time.
10. Wear appropriate exercise clothing when using the treadmill. Do not wear loose clothing that could become caught in the treadmill. Athletic support clothes are recommended for both men and women. Always wear athletic shoes. Never use the treadmill with bare feet, wearing only stockings, or in sandals.
11. When connecting the power cord, plug the power cord into an earthed circuit. When replacing the fuse, an ASTA approved BS 1362 type should be fitted to the fuse carrier. A 13 amp fuse should be used. No other appliance should be on the same circuit.
12. If you need an extension cord, use only 14 gauge cord of 1.5m or less in length.
13. Keep the power cord away from heated surfaces.
14. Never move the walking belt while the power is turned on. Do not operate the treadmill if the power cord or plug is damaged, or if the treadmill is not working properly. (See “Troubleshooting” Page32. If the treadmill is not working properly.)
15. Never start the treadmill while you are standing on the walking belt. Stand on the side rails hold the handrails start the unit at a low speed and then step on to the unit, when comfortable increase the speed to one that you’re comfortable with..
16. The treadmill is capable of high speeds. Adjust the speed in small increments to avoid sudden jumps in speed.
17. The pulse sensor is not a medical device. Various factors, including the user’s movement, may affect the accuracy of the heart rate readings. The pulse sensor is intended only as an exercise aid in determining heart rate trends in general.
18. Never leave the treadmill unattended while it is running. Always remove the safety key when the treadmill is not in use.
19. Do not attempt to raise, lower, or move the treadmill until it’s properly assembled. (See Page 17 “Assembly” and Page 25 “Folding the Treadmill”)
20. Do not change the incline of the treadmill by placing objects under the treadmill.
21. When folding or moving the treadmill make sure the “power fold switch is fully engaged” (See Page 19 “Folding”)
22. Inspect and tighten all parts of the treadmill regularly. (See page 30 “Maintenance”)
23. Never drop or insert any object into any opening in/on the treadmill.

HARDWARE COMPARISON CHART

Hardware chart:

For your convenience, we have identified the hardware used in the assembly of this product. This chart is provided to help you identify those items that may be unfamiliar to you.

NO.	DESCRIPTION	QTY.
106	Water Bottle Holder	2
407	Lock Pin	1
109	Safety Key	1
819	M8 x42mm Bolt	4
821	Φ8 Washer	6
823	M8 x18mm Bolt	2
A	Allen Wrench	1
B	Power Cord	1

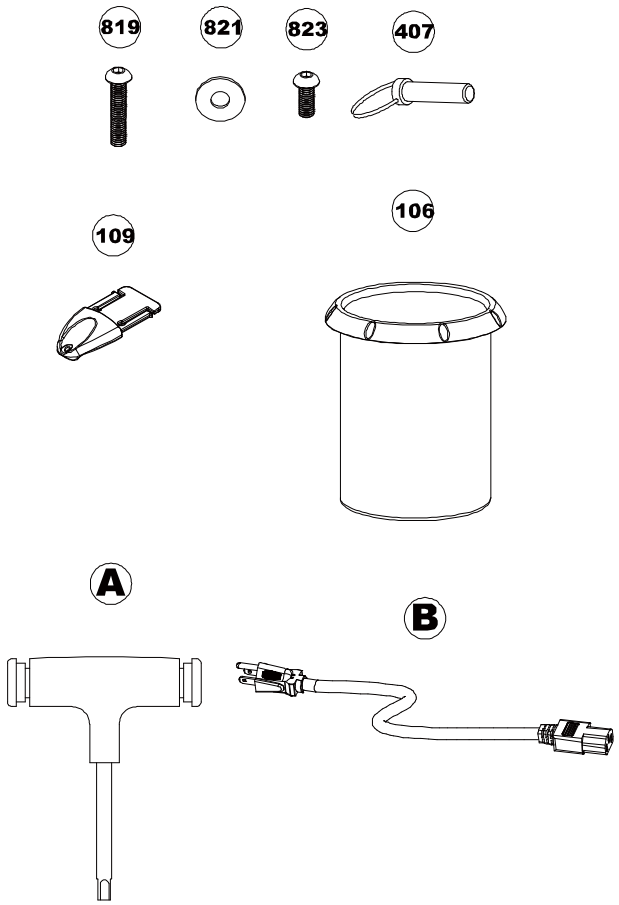

MILIMETERS

PARTS LIST

100		**Console Assembly**		
	101	Console Plate bar	1	AG-12301 -101
	102	Computer PC Board	1	AG-12301 -102
	103	Console Plate	1	AG-12301 -103
	104	Console Housing-Upper	1	AG-12301 -104
	105	Console Housing-Bottom	1	AG-12301 -105
	106	Water Bottle Holder	2	AG-12301 -106
	107	Safety Key Base	1	AG-12301 -107
	109	Safety Key	1	AG-12301 -108
200		**Handle Bar Assembly**		
	201	Handle Bar	1	AG-12301 -201
	202	Handle Bar Foam Grip	2	AG-12301 -202
	203	Handle Bar End Cap	2	AG-12301 -203
	204	Handle Pulse Sensor	2	AG-12301 -204
300		**Upright Assembly**		
	301	Upright-L	1	AG-12301 -301
	302	Upright-R	1	AG-12301 -302
	303	Power Switch Plate Base	1	AG-12301 -303
	304	Power Switch Plate	1	AG-12301 -304
	305	Power Switch	1	AG-12301 -305
	306	Power Breaker	1	AG-12301 -306
	307	Power cord Switch Plate	1	AG-12301 -307
400		**Base Frame Assembly**		
	401	Base Frame	1	AG-12301 -401
	402	Fold Up Support Tube	1	AG-12301 -402
	403	Plastic Wheel	1	AG-12301 -403
	404	Caster Holder	2	AG-12301 -404
	405	Transportation Wheel	2	AG-12301 -405
	406	Rubber Cushion	4	AG-12301 -406
	407	Lock Pin	1	AG-12301 -407
500		**Motor Assembly**		
	501	Motor Hood Top	1	AG-12301 -501
	502	Motor Hood Bottom	1	AG-12301 -502
	503	Motor Hood -Left	1	AG-12301 -503
	504	Motor Hood -Right	1	AG-12301 -504
	505	Motor Bottom Cover	1	AG-12301 -505
	506	Motor Holder	1	AG-12301 -506
	507	Driving Motor	1	AG-12301 -507

PARTS LIST

	508	Front Roller Tube +Shaft	1	AG-12301 -508
	509	Driving Belt	1	AG-12301 -509
	510	Motor Hood Side Patch	2	AG-12301 -510
	511	Control board	1	AG-12301 -511
600.		**Running Deck Assembly**		
	601	Running Belt	1	AG-12301 -601
	602	Running Deck	1	AG-12301 -602
	603	Side Rail -Left	1	AG-12301 -603
	604	Side Rail -Right	1	AG-12301 -604
	605	Side Rail End Cap - Left	1	AG-12301 -605
	606	Side Rail End Cap - Right	1	AG-12301 -606
	607	Side Rail Guider	8	AG-12301 -607
700		**Deck Frame Assembly**		
	701	Deck Frame	1	AG-12301 -901
	702	Running Deck Support Tube	1	AG-12301 -902
	703	Running Deck Support Tube Foam Grip	1	AG-12301 -903
	704	Rear Roller Tube + Shaft	1	AG-12301 -904
	705	Rear End Caps	2 sets	AG-12301 -905
	706	Cushion Pad	8	AG-12301 -906
800		**Fastening**		
	801	Φ3.5x14mm Screw	10	AG-12301 -801
	803	Φ4x14mm Screw	26	AG-12301 -803
	804	M6 x45mm Bolt	1	AG-12301 -804
	805	Φ4x19mm Screw	18	AG-12301 -805
	806	M8 x30mm Screw	10	AG-12301 -806
	807	M4 x12mm Screw	9	AG-12301 -807
	809	M8 Nylon Nut	5	AG-12301 -809
	811	M8 x48 Fixed Bolt	1	AG-12301 –811
	812	M8 x85mm Fixed Bolt	1	AG-12301 -812
	813	Φ8x26x3 Washer	2	AG-12301 –813
	814	M8 x12mm Bolt	2	AG-12301 -814

PARTS LIST

	815	Φ8 Spring Washer	2	AG-12301 –815
	816	M10 x116mm Fixed Bolt	1	AG-12301 –816
	818	M4x30mm Screw	2	AG-12301 –818
	819	M8 x42mm Bolt	8	AG-12301 –819
	820	M5x14 mm Bolt	4	AG-12301 –820
	821	Φ8 Washer	16	AG-12301 –821
	823	M8 x18mm Bolt	4	AG-12301 -823
	824	M8 x34mm Bolt	1	AG-12301 –824
	825	Φ10mm Washer	3	AG-12301 –827
	826	M10 Nylon Nut	3	AG-12301 –828
	828	M12 x98mm Bolt	2	AG-12301 –830
	831	Φ8x24x11 Spring	1	AG-12301 –831
	833	Φ3x10mm Screw	2	AG-12301 -833
	834	Φ4x19mm Screw	2	AG-12301-834
	836	M8 x45mm Bolt	3	AG-12301-835
	837	Hand Pulse Sensor Bush	2	AG-12301-837
	838	Φ12 Washer	2	AG-12301-838

PARTS DIAGRAM

A MAJORITY OF THE PARTS SHOWN HERE HAVE BEEN PRE-ASSEMBLED AT THE FACTORY.

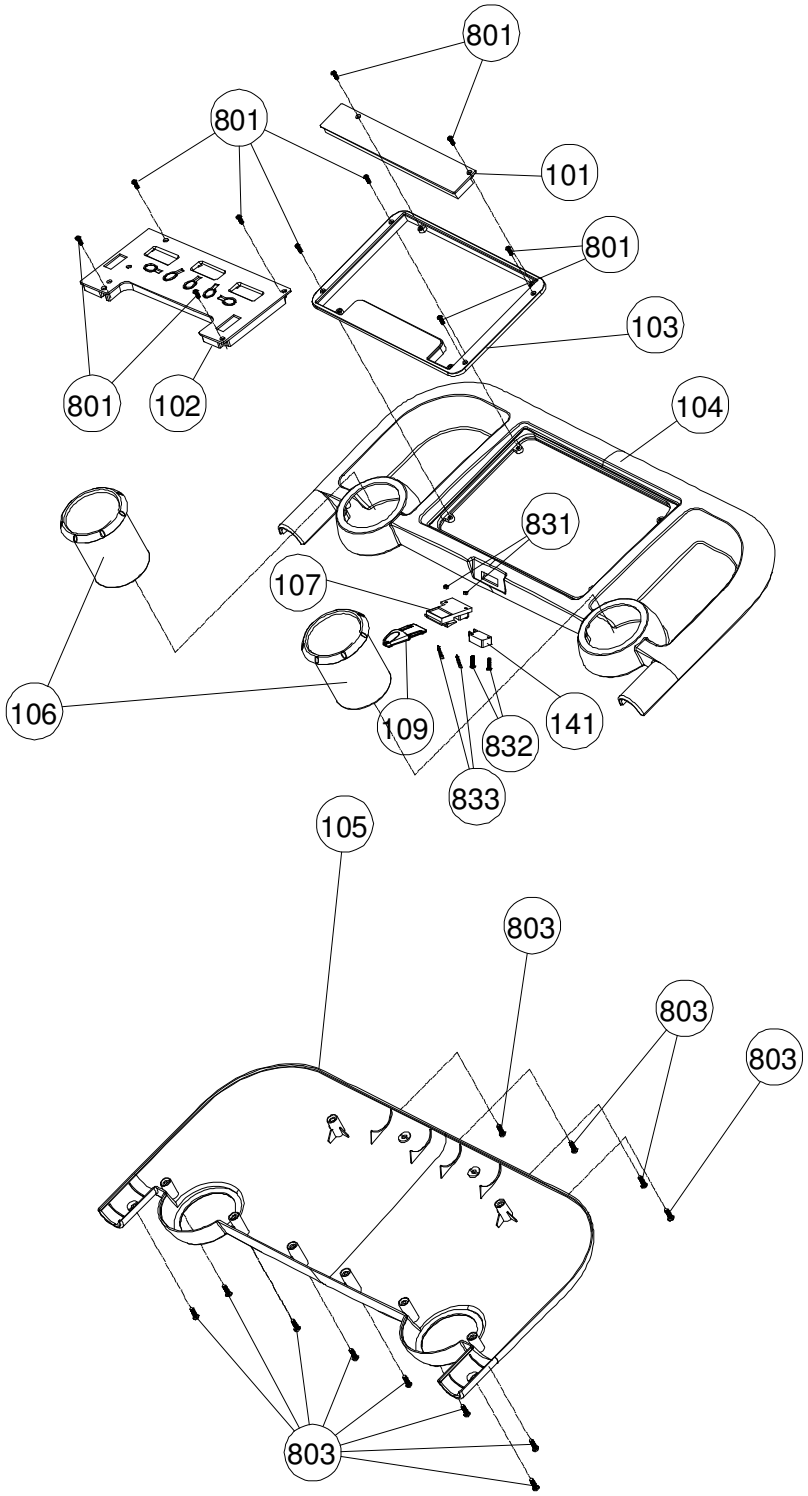

PARTS DIAGRAM

A MAJORITY OF THE PARTS SHOWN HERE HAVE BEEN PRE-ASSEMBLED AT THE FACTORY

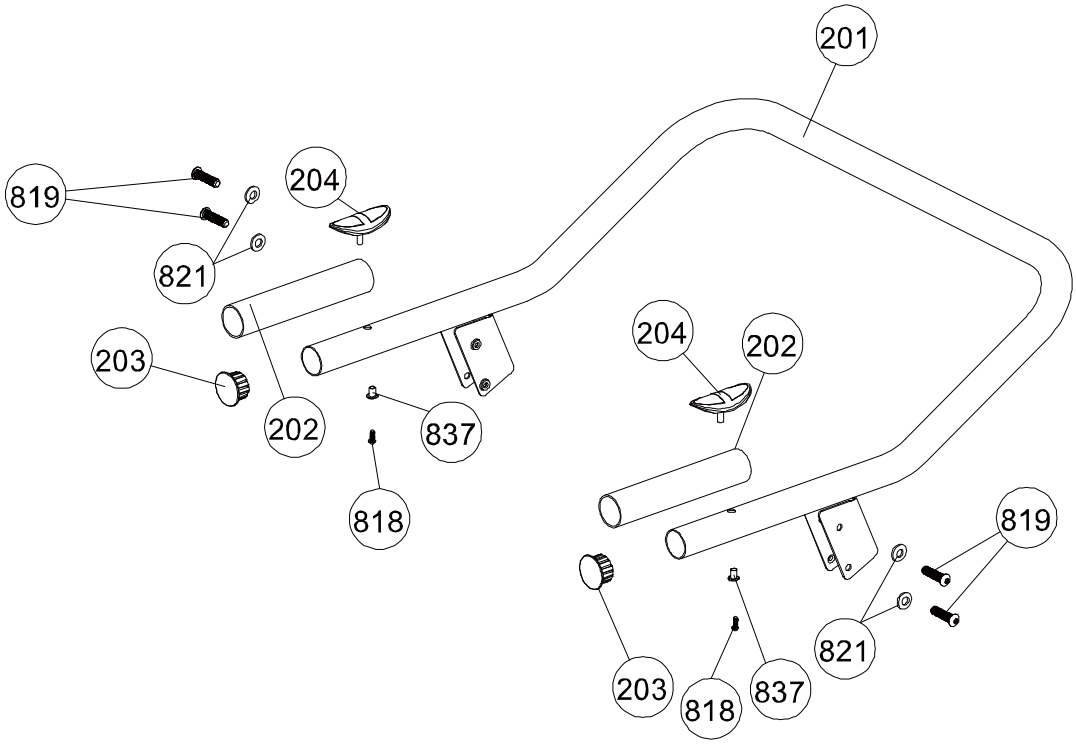

PARTS DIAGRAM

A MAJORITY OF THE PARTS SHOWN HERE HAVE BEEN PRE-ASSEMBLED AT THE FACTORY.

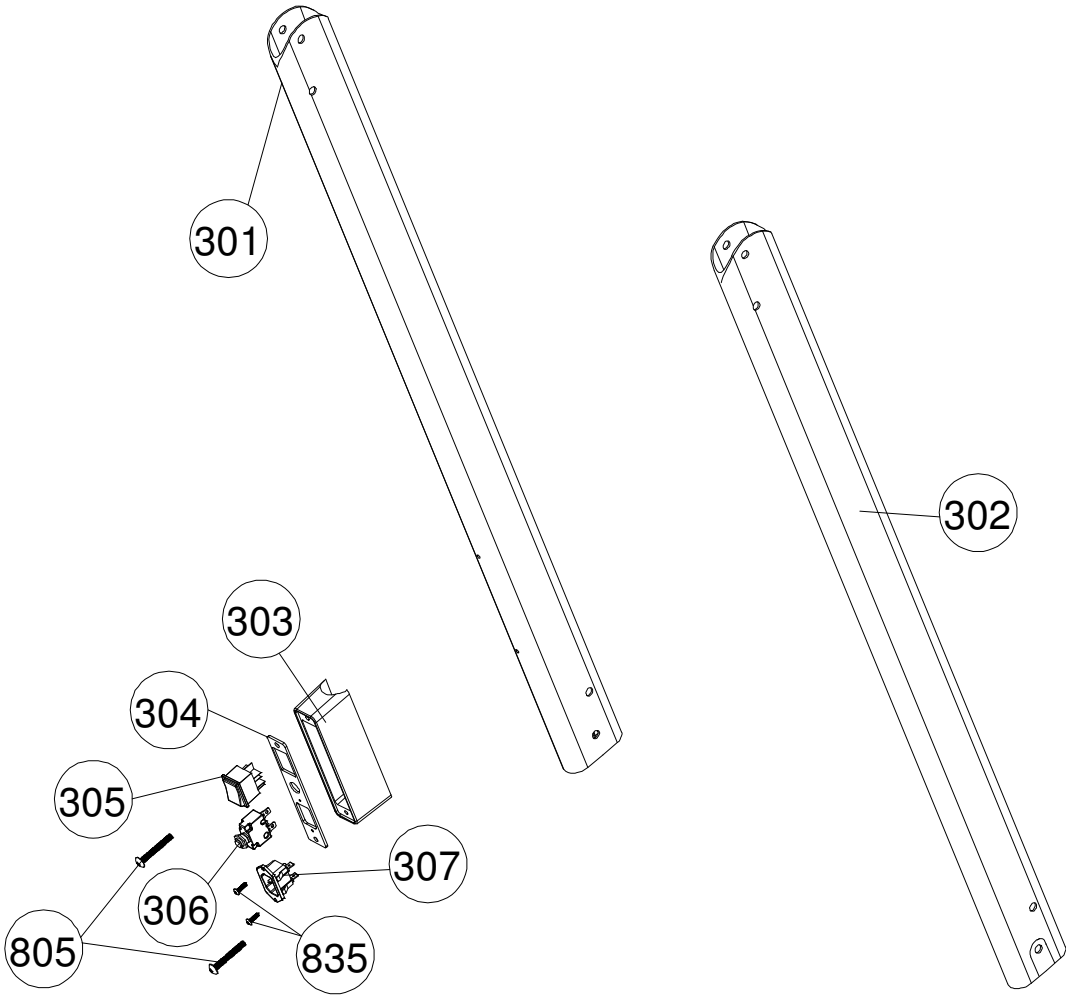

PARTS DIAGRAM

A MAJORITY OF THE PARTS SHOWN HERE HAVE BEEN PRE-ASSEMBLED AT THE FACTORY.

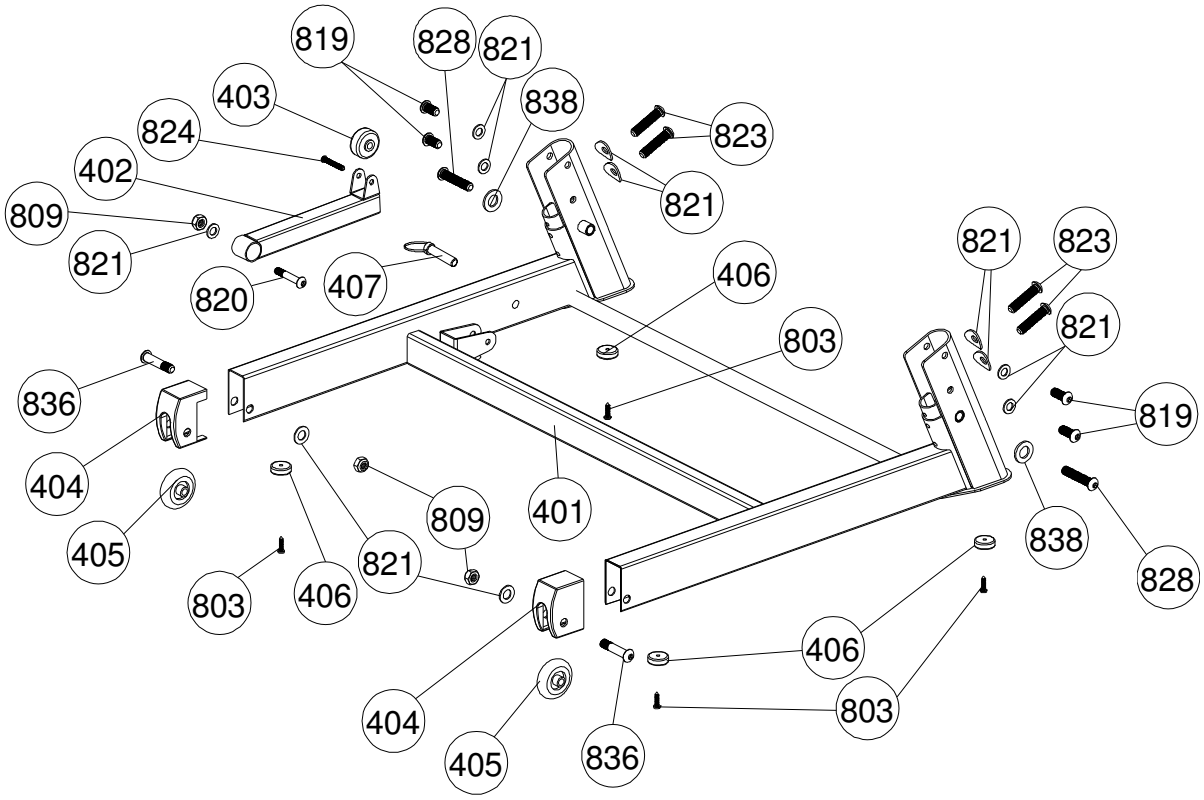

PARTS DIAGRAM

A MAJORITY OF THE PARTS SHOWN HERE HAVE BEEN PRE-ASSEMBLED AT THE FACTORY.

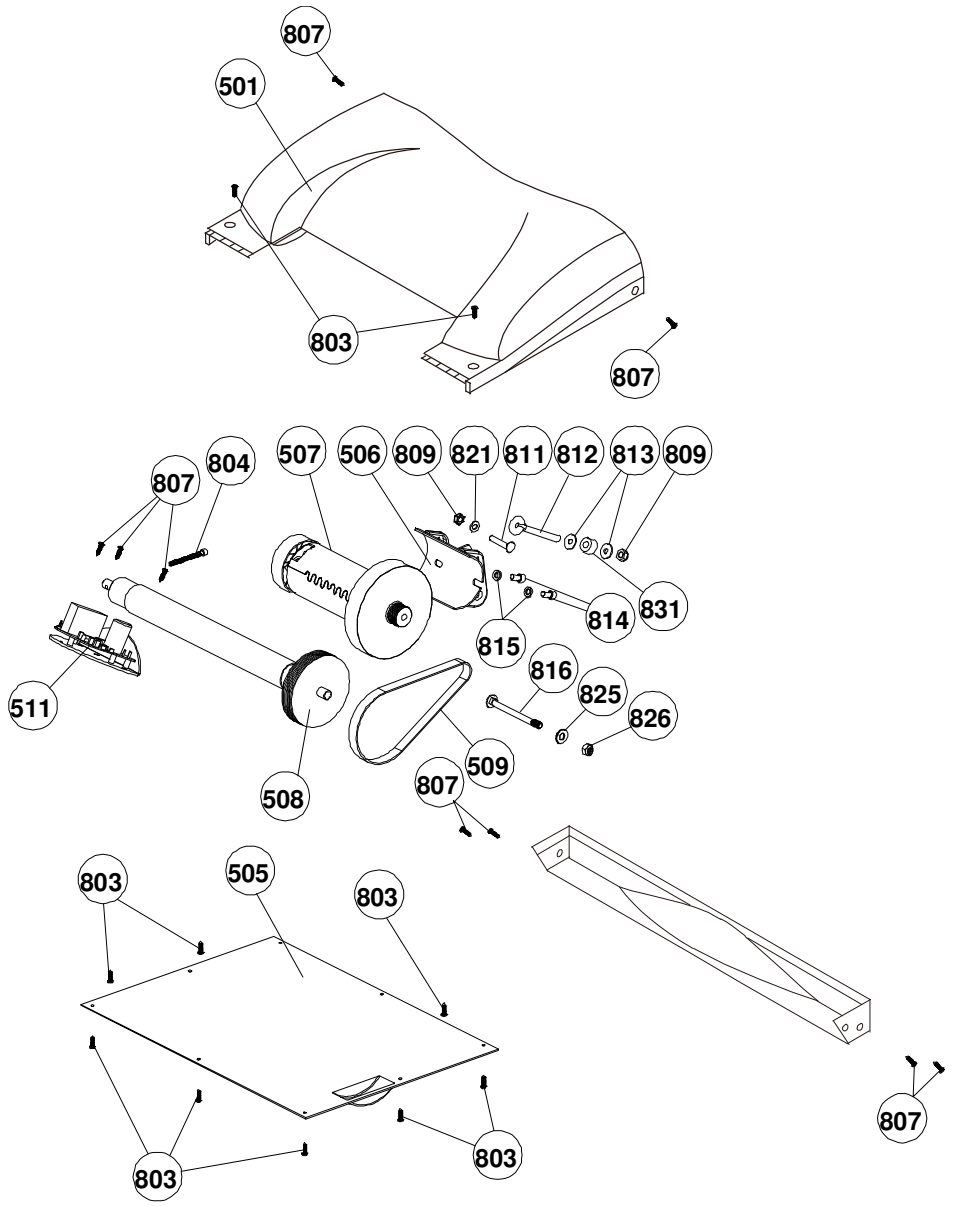

PARTS DIAGRAM

A MAJORITY OF THE PARTS SHOWN HERE HAVE BEEN PRE-ASSEMBLED AT THE FACTORY.

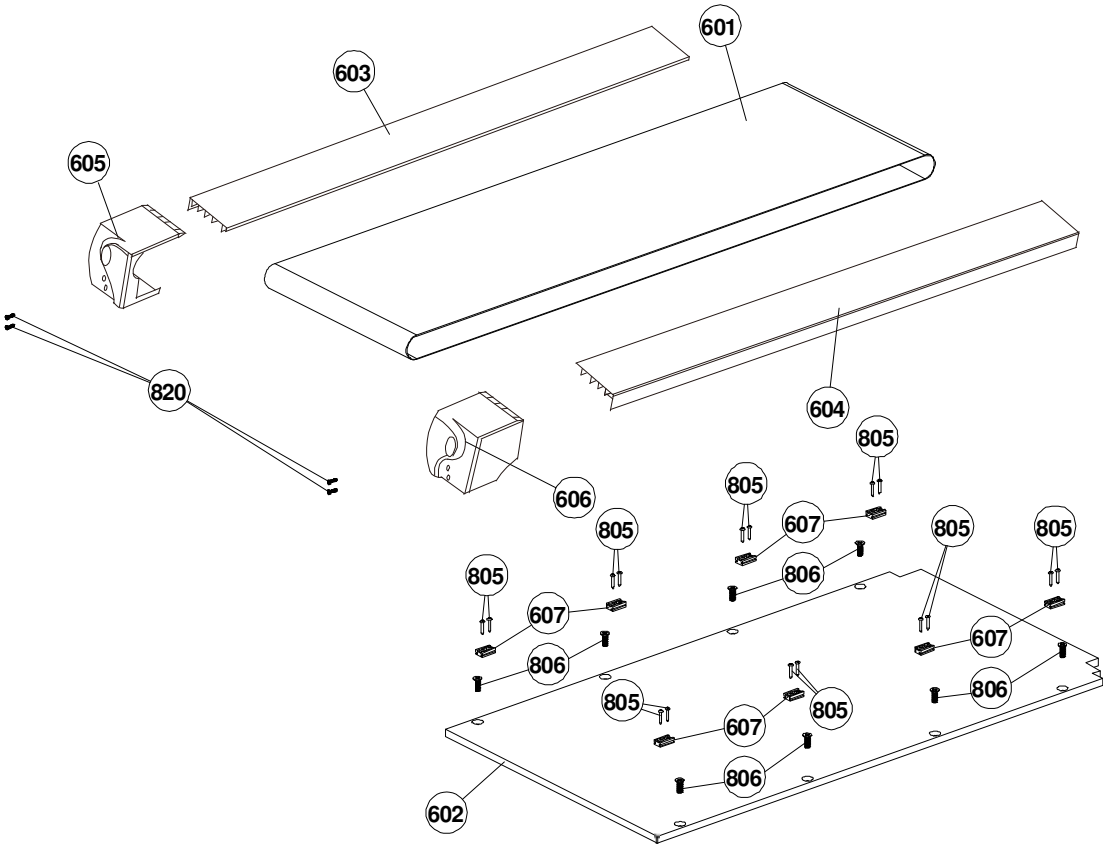

PARTS DIAGRAM

A MAJORITY OF THE PARTS SHOWN HERE HAVE BEEN PRE-ASSEMBLED AT THE FACTORY.

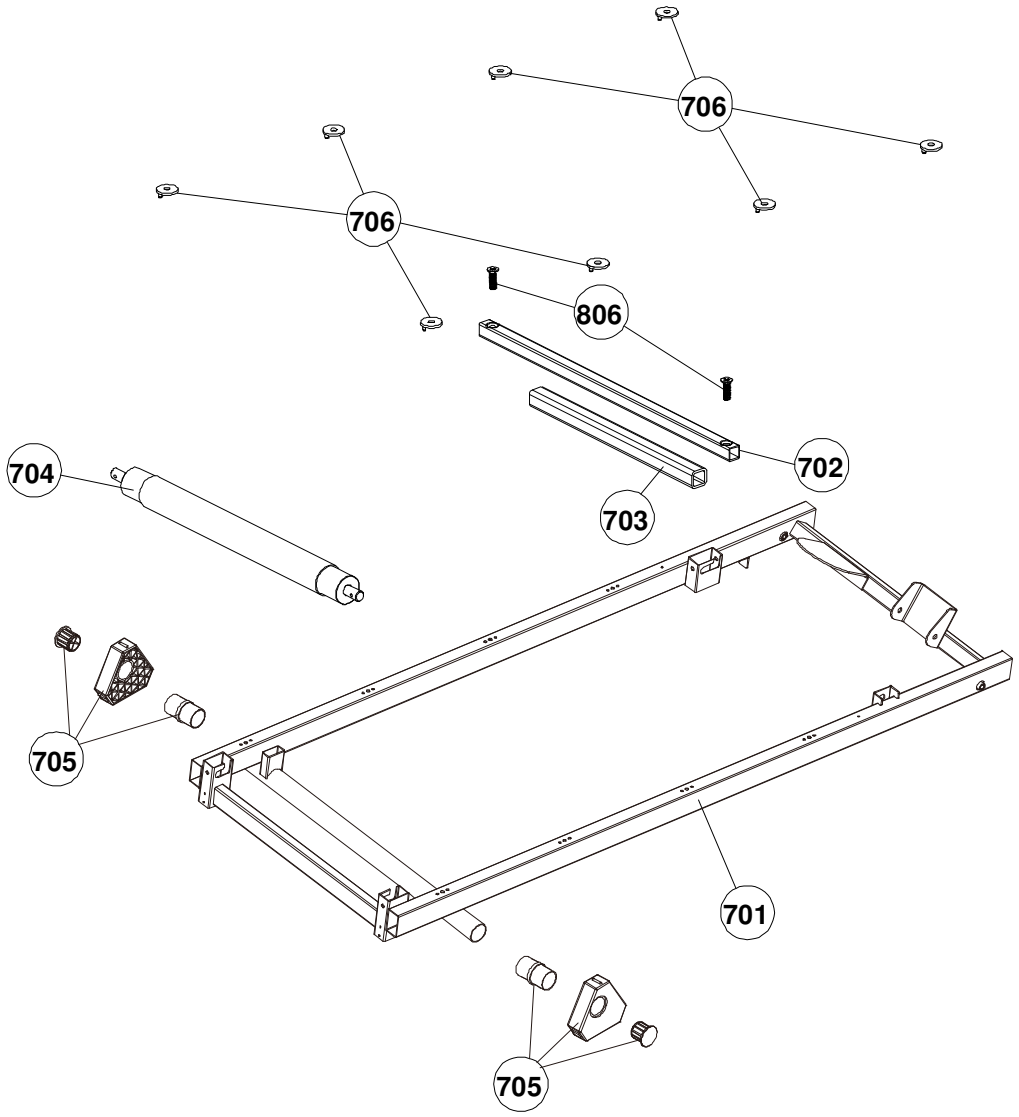

ASSEMBLY INSTRUCTIONS

Before you Begin

- Clear your work area.
- Make sure that you've cleared a large enough area in order to assemble the treadmill.
- Make sure there is nothing in the area that may cause injury during assembly.
- Make sure there's enough space for you to move around the treadmill after assembly.
- Remove all components from the boxes before you start assembling the treadmill.

Tools

Before you begin to assemble your treadmill please look at the hardware diagram and familiarize yourself with the parts you need to assemble and the tools you'll need.

Make sure you can get hold of the tools easily when assembling your treadmill.

Note

The treadmill has some parts that are fairly heavy. It may be an idea if you have someone that could help you to assemble it.

Make sure that the treadmill is not plugged in before you start assembly.

Make sure the treadmill is on a flat surface.

Dispose of all packing material at a recycling center when ever possible.

Retain this manual for future reference.

ASSEMBLY INSTRUCTIONS

STEP 1:

Remove the contents from the shipping box.

Rotate the uprights into position.
Secure from the sides using one M8 x 42 mm Bolt and one Φ8 mm Washer. Secure from the front using two M8 x 18 mm Bolts and two Φ8 mm Washers.

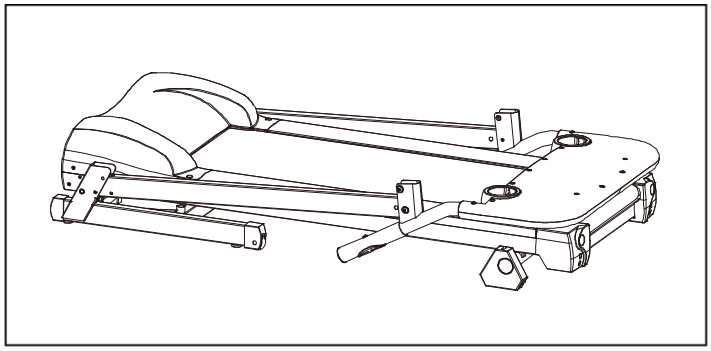

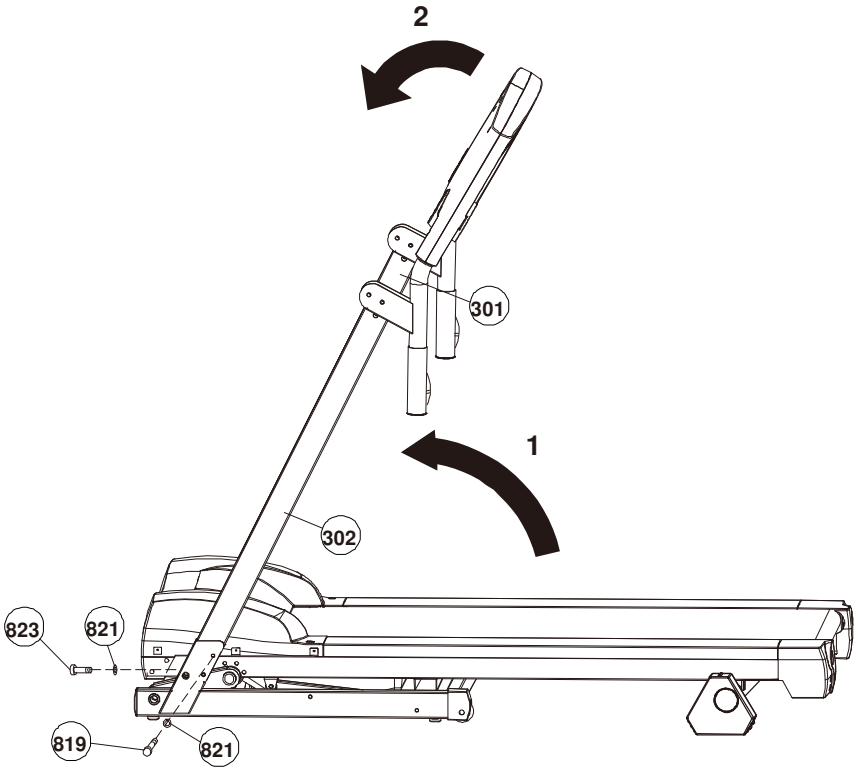

ASSEMBLY INSTRUCTIONS

STEP 2:
Rotate the handlebar into position.
Secure from the sides using one M8 x 42 mm Bolt and one Φ8 mm Washer.

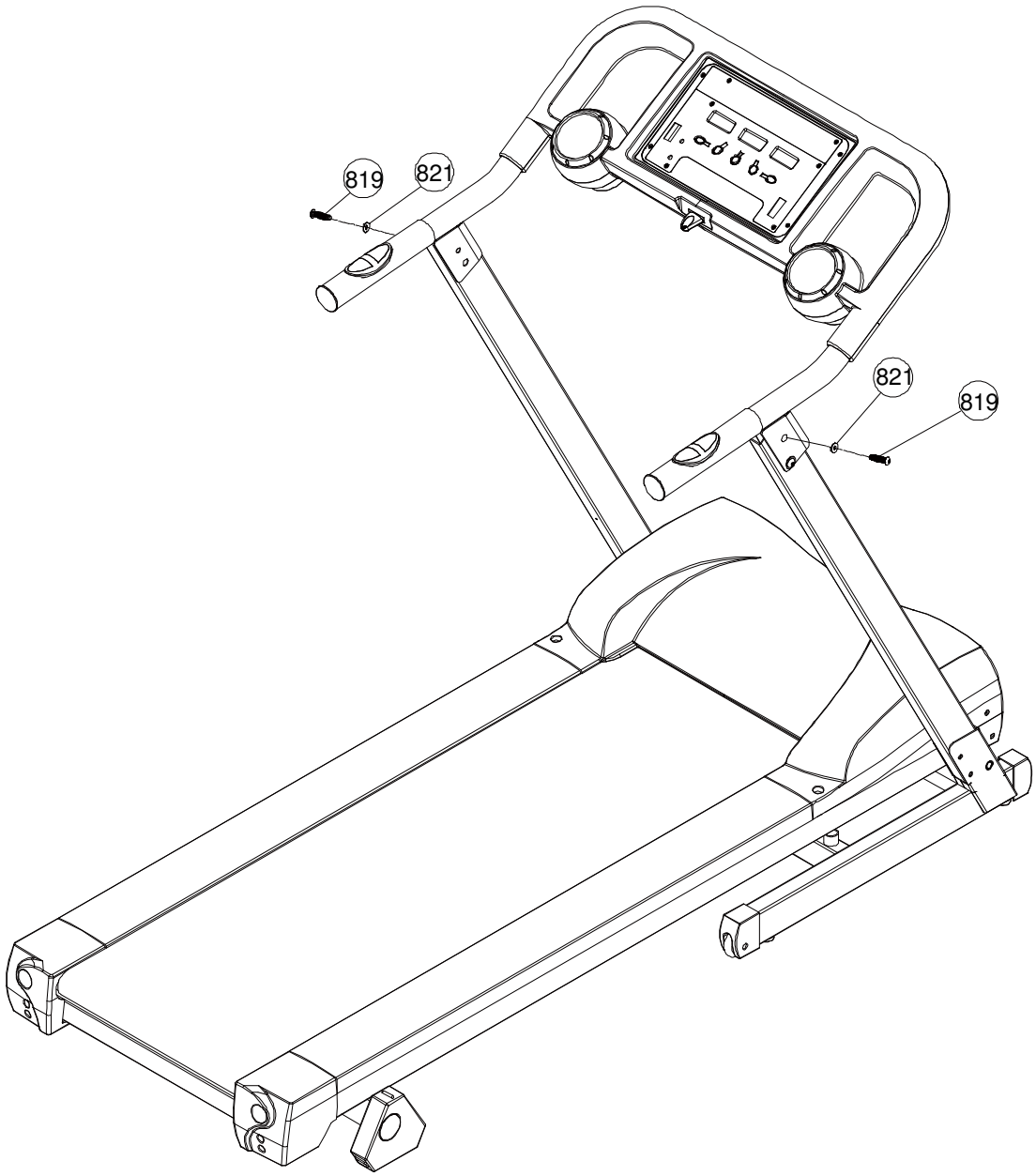

ASSEMBLY INSTRUCTIONS

STEP 3:
Attach the water bottle holder to the console housing-upper and push down until snap in place.

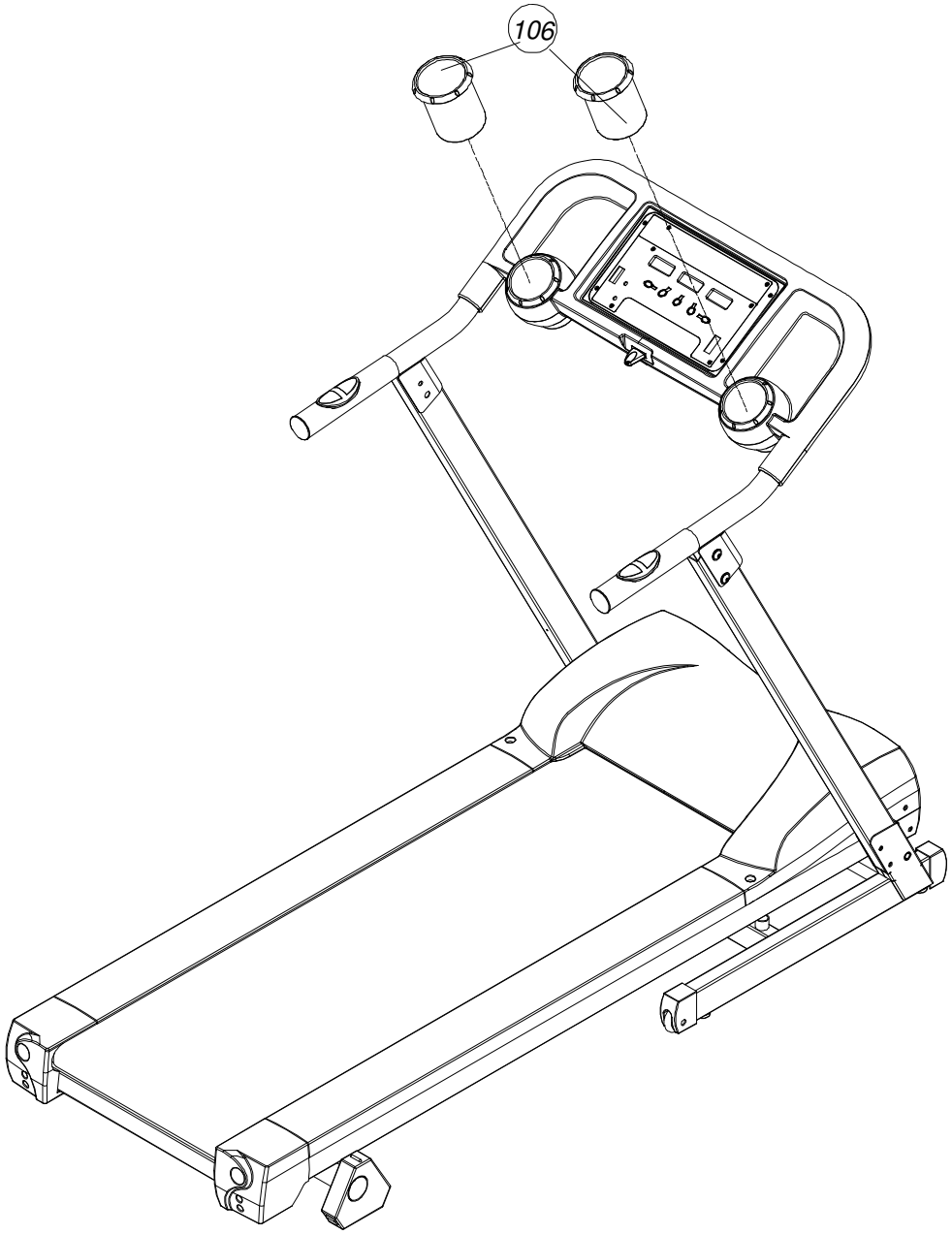

FOLDING INSTRUCTIONS

How to fold up the treadmill:

Your treadmill can be folded up for space saving storage. To do this follow the instructions here:

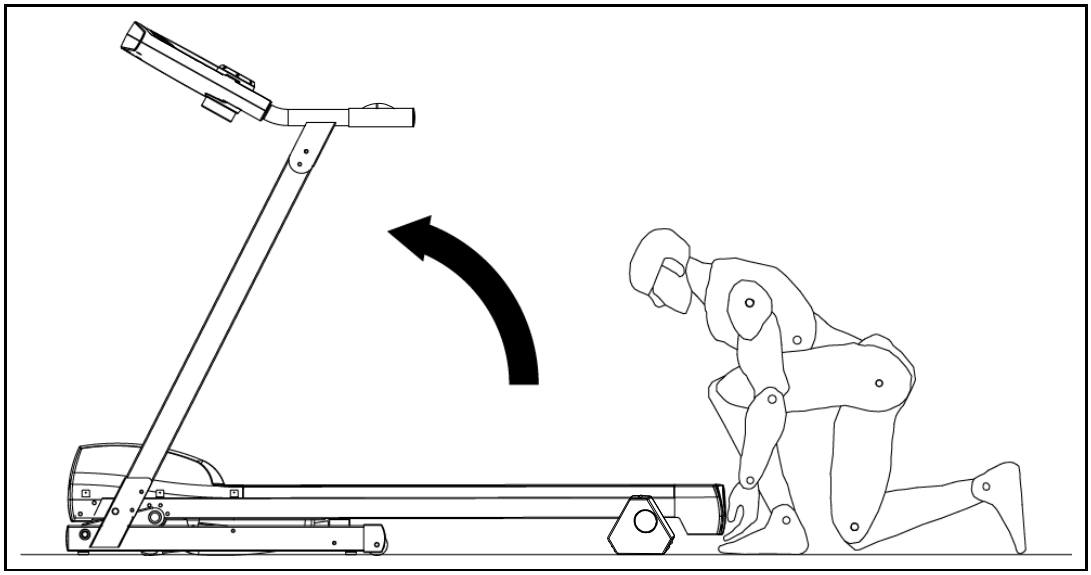

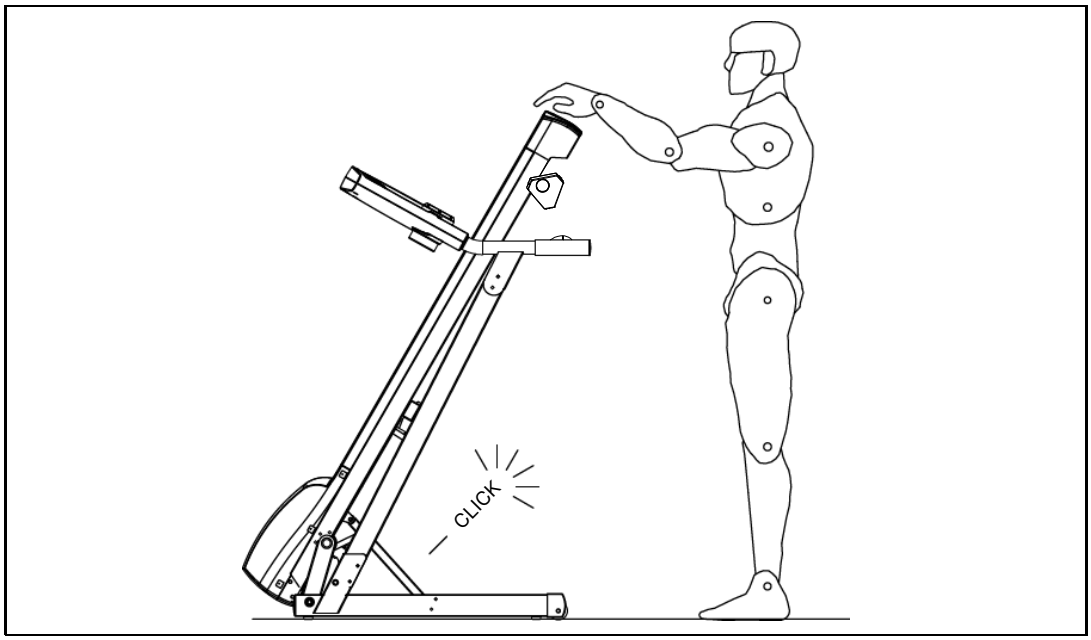

UNFOLDING INSTRUCTIONS

How to unfold the treadmill:

To unfold the treadmill for use follow the instructions here:

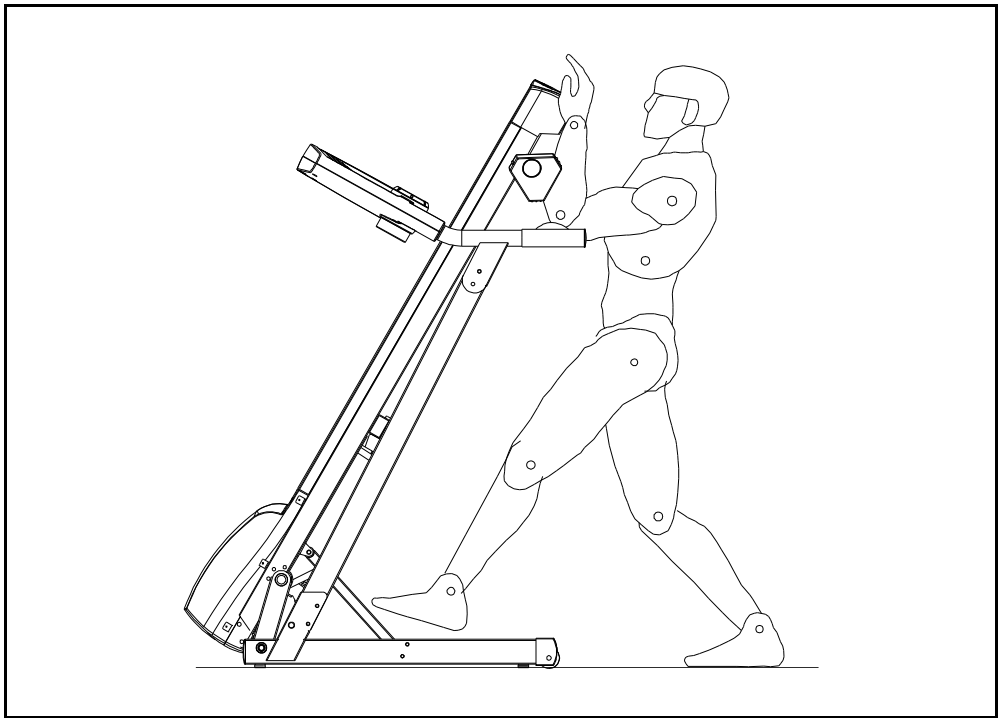

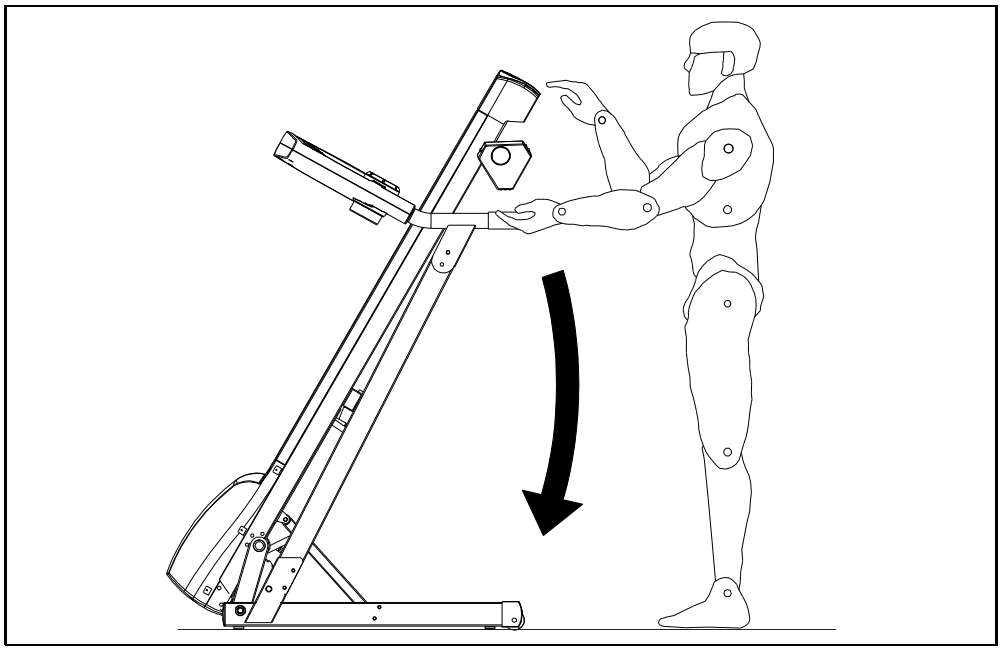

TRANSPORT INSTRUCTIONS

TRANSPORT INSTRUCTIONS:

To roll away for storage simply grab the rear deck, lift slightly and roll to desired location.

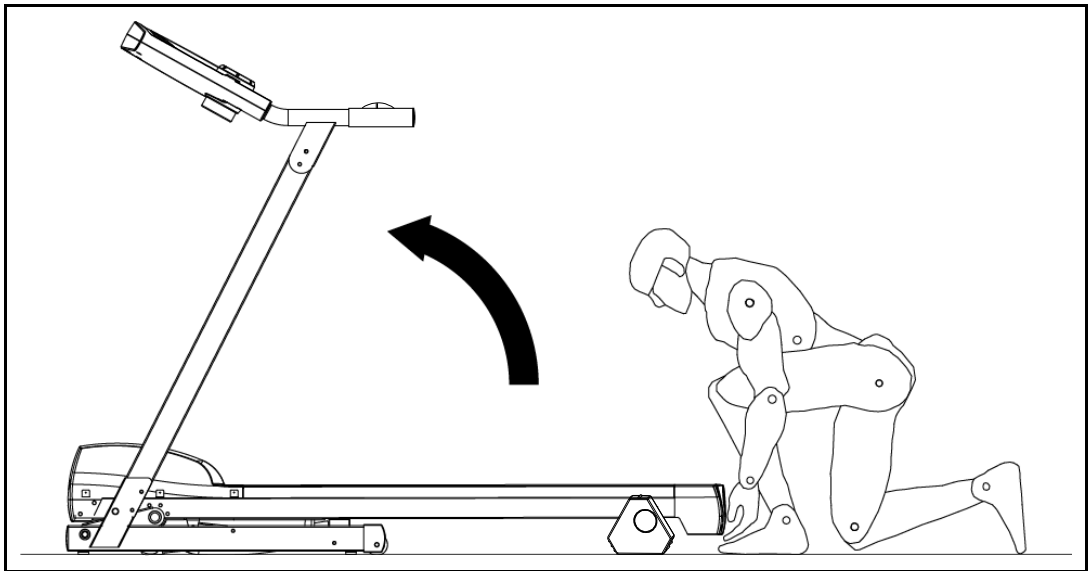

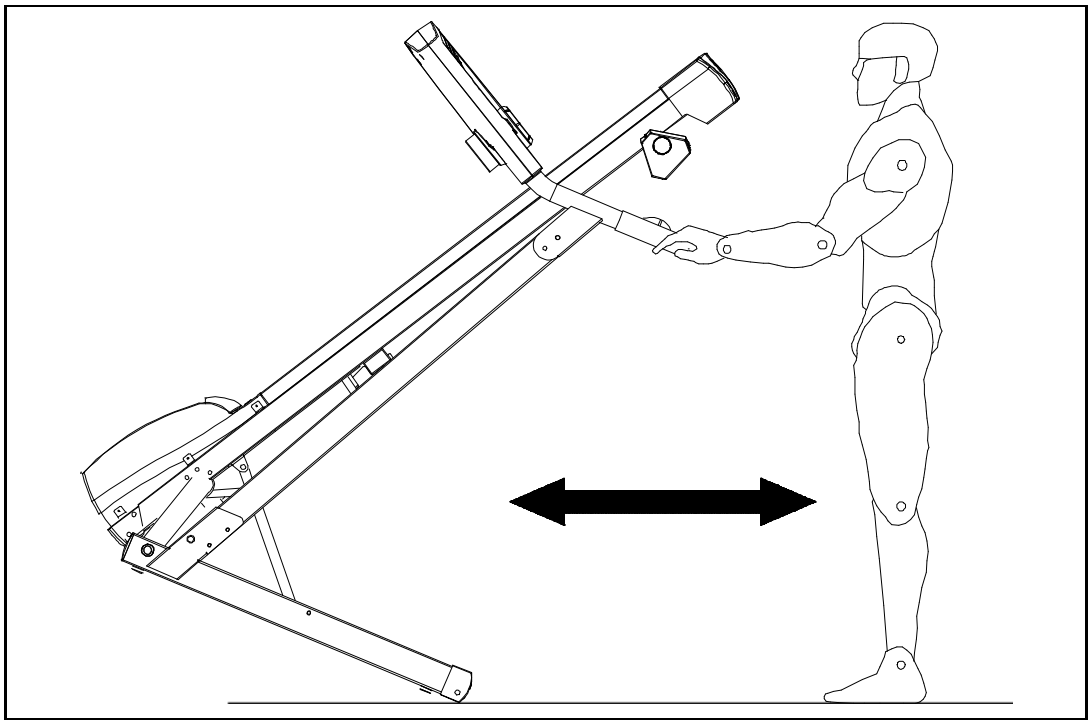

Locking Pin

After folding the deck up insert the safety lock pin trough the hole in the frame. BE SURE TO INSERT THE SAFETY LOCK PIN COMPLETELY AS SHOWN BELOW. Remember to remove the safety lock pin before unfolding the deck.

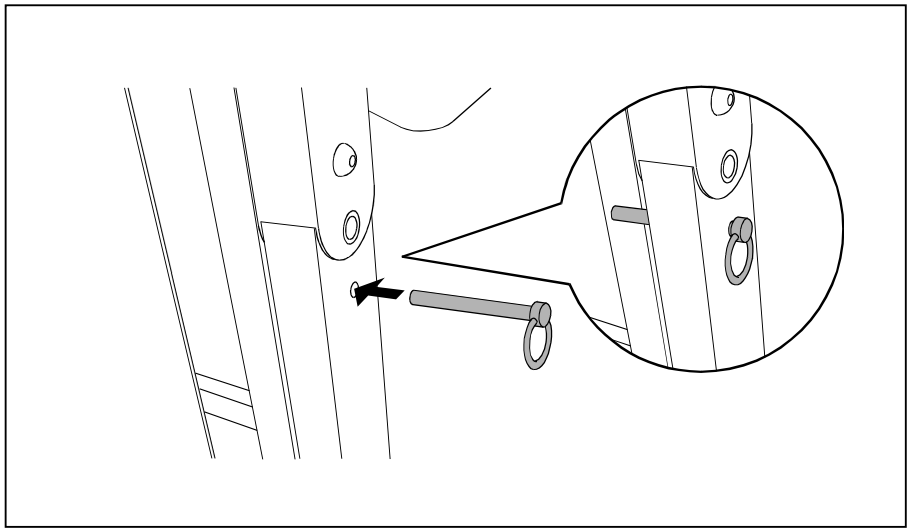

COMPUTER INSTRUCTIONS

COMPUTER INSTRUCTIONS

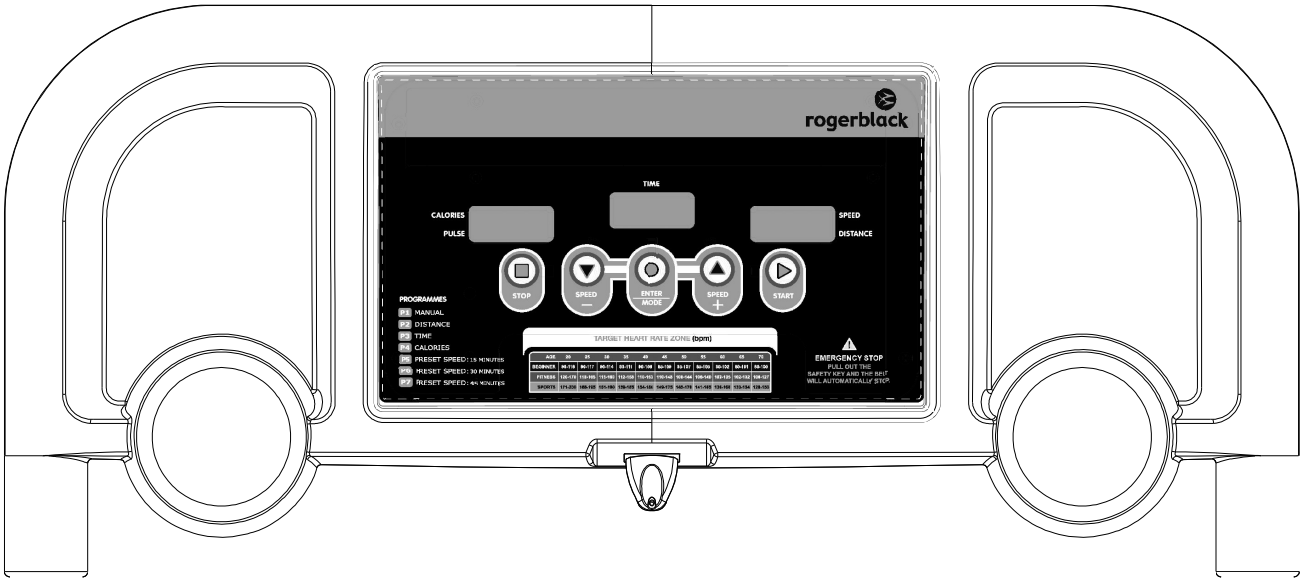

COMPUTER OPERATION

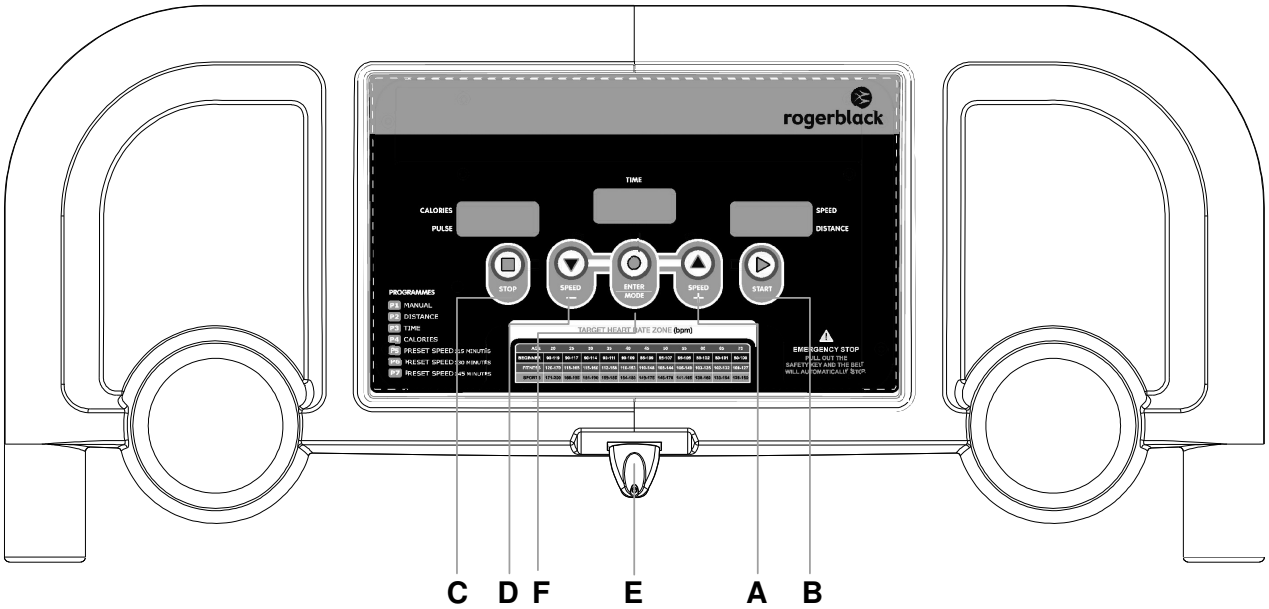

SPEED UP	**A**	**B**	**START**
STOP	**C**	**D**	**SPEED DOWN**
SAFETY KEY	**E**	**F**	**ENTER/MODE**

BUTTONS

START
Press to start exercise initial speed 0.8 km/0.5 ml.

STOP / ENTER
1. Press to confirm program and preset function values under setting mode.
2. Press to quit preset program and function value after complete single program.
3. Setting procedure: returns to beginning of setting mode before pressing the START key.
4. Press to stop exercise during workout time.

SPEED UP / DOWN
1. Press to increase/decrease exercise speed by 0.1km/ml.
2. Hold the button to increase/decrease rapid speed by 0.5km/ml per second and release the button to stop the function .

Press to select programs and preset related function value.

IMPORTANT
· The console display will turn itself off automatically about five minutes after the bell has stopped moving.
· The pulse function is for reference only, and not to be used for medical purposes.

SAFETY KEY

The safety key must be inserted into the slot on the console in order to operate the treadmill. Always insert the safety key and attach the clip to your clothing waist before beginning your workout.

If you should encounter problems and need to stop the motor quickly, simply pull on the cord the disengage the safety key from the console. To continue operation simply turn the power switch to off, set the speed controller to stop and then reinsert the safety key into the console.

COMPUTER OPERATION

COMPUTER OPERATION

Power on monitor full for 2 seconds. **P1** manual will blink in the upper right window, press **SPEED UP/DOWN** keys for desired program. Press **ENTER/MODE** to confirm selected program or press the **START** key directly to start exercise without a function value.

Please see instructions next for different program options.

PROGARAM 1 – MAUAL

1. Press **ENTER/MODE** to confirm the program and press **START** key to start exercise.
2. Press **ENTER/MODE** before starting exercise to run presetting procedure, with **P1** blinking.

-TIME: Accumulates and displays workout time from start of exercise.
-DISTANCE: Accumulates and displays workout distance from start of exercise.
-CALORIES: Accumulates and displays calories consume during workout time.
-SPEED: Displays current speed.

PROGRAM 2 – DISTANCE

1. Press **ENTER/MODE** to confirm the programe.

Press **ENTER/MODE** before starting exercise to run presetting procedure, with **P2** blinking.

-DISTANCE: Press **SPEED UP/DOWN** keys to preset the distance target values and press **START**
-DISTANCE: Count down from preset target value. While distance counts down to zero, speed goes down to zero by 0.5km per second (preset target reached).
-TIME: Accumulates and displays workout time from start of exercise.
-CALORIES: Accumulates and displays calories consume during workout time.
-SPEED: Displays current speed.

PROGRAM 3 – TIME

1. Press **ENTER/MODE** to confirm the program and press **START** key to start exercise.
2. Press **ENTER/MODE** before starting exercise to run presetting procedure, with **P3** blinking.

-TIME: Press **SPEED UP/DOWN** keys to run preset time target value and press **START**.
-TIME: Count down from preset target value. While time counts down to zero, the speed goes down to zero by 0.5km per second (preset target reached).
-DISTANCE: Accumulates and displays workout distance from start of exercise.
-CALORIES: Accumulates and displays calories consume during workout time.
-SPEED: Displays current speed.

PROGRAM 4 – CALORIES

1. Press **ENTER/MODE** to confirm the program and press START key to start exercise.
2. Press **ENTER/MODE** before starting exercise to run presetting procedure, with **P4** blinking.

-CALORIES: Press **SPEED UP/DOWN** keys to run preset calories target value and press **START**.
-CALORIES: Count down from preset target value. While calories counts down to zero, the speed goes down to zero by 0.5km per second (preset target reached).
-TIME: Accumulates and displays workout time from start of exercise.
-DISTANCE: Accumulates and displays workout distance from start of exercise.
-SPEED: Displays current speed.

COMPUTER OPERATION

PROGRAM 5 – 15 MINUTES PRESET SPEED

1. Press **ENTER/MODE** to confirm the program.
2. Press **START** key to start the exercise, or press **ENTER/MODE** before starting exercise to run preset procedure with **P5** blinking.

-TIME: Accumulates and displays workout time from start of exercise.
-DISTANCE: Accumulates and displays workout distance from start of exercise.
-PULSE: Detects and displays current heart rate.
-CALORIES: Accumulates and displays calories consume during workout time.
-SPEED: Displays current speed.

PROGRAM 6 – 30MINUTES PRESET SPEED

1. Press **ENTER/MODE** to confirm the program.
2. Press **START** key to start exercise or press **Enter/MODE** before starting exercise to run preset procedure with **P6** blinking.

-TIME: Accumulates and displays workout time from start of exercise.
-DISTANCE: Accumulates and displays workout distance from start of exercise.
-PULSE: Detect and displays current heart rate.
-CALORIES: Accumulates and displays calories consume during workout time.
-SPEED: Displays current speed.

PROGRAM 7 – 45 MINUTES PRESET SPEED

Press **ENTER/MODE** to confirm the program. Press **START** key to start exercise or press **ENTER/MODE** before starting exercise to run preset procedure with **P7** blinking.

-TIME: Accumulates and displays workout time from start of exercise.
-DISTANCE: Accumulates and displays workout distance from start of exercise.
-CALORIES: Accumulates and displays calories consume during workout time.
-SPEED: Displays current speed.

SHIFT PROGRAMS AMONG PROGRAM 5, PROGRAM 6 AND PROGRAM 7

If you want to shift new program after you confirmed the program with **ENTER/MODE** key, press **STOP** key then original program e.g. **P5**, **P6** or **P7** blinking, and press **UP/DOWN** key to choose desire program then press **ENTER/MODE** to confirm it, with **START** key pressing, the treadmill works as you want.

STRETCHING ROUTINE

Warm up and cool down:

A successful exercise program consists of a warm-up, aerobic exercise, and a cool-down. Warming up is an important part of your workout, and should begin every session. It prepares your body for more strenuous exercise by heating up and stretching out your muscles, increasing your circulation and pulse rate, and delivering more oxygen to your muscles. At the end of your workout, repeat these exercises to reduce sore muscle problems. We suggest the following warm-up and cool-down exercises:

Toe Touch:

Slowly bend forward from your waist, letting your back and shoulders relax as you stretch toward your toes. Reach down as far as you can and hold for 15 counts.

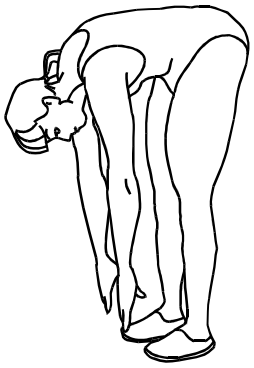

Shoulder Lift:

Lift your right shoulder up toward your ear for one count. Then lift your left shoulder up for one count as you lower your right shoulder.

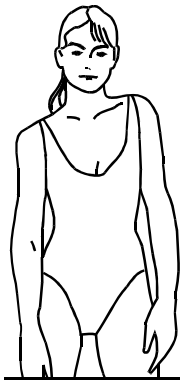

Head Roll:

Rotate your head to the right for one count, feeling the stretch up the left side of your neck. Next, rotate your head back for one count, stretching your chin to the ceiling and letting your mouth open. Rotate your head to the left for one count, and finally, drop your head to your chest for one count.

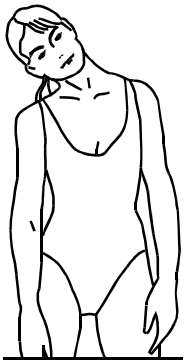

STRETCHING ROUTINE

Hamstring Stretch:

Sit with your right leg extended. Rest the sole of your left foot against your right inner thigh. Stretch toward your toe as far as possible. Hold for 15 counts. Relax and then repeat with left leg extended.

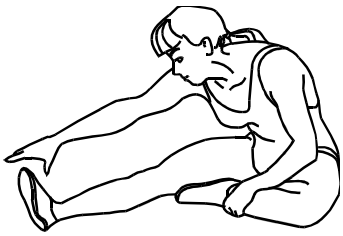

Side Stretch:

Open your arms to the side and continue lifting them until they are over your head. Reach your right arm as far upward toward the ceiling as you can for one count. Feel the stretch up your right side. Repeat this action with your left arm.

Calf-Achilles Stretch:

Lean against a wall with your left leg in front of the right and your arms forward. Keep your right leg straight and the left foot on the floor; then bend the left leg and lean forward by moving your hips toward the wall. Hold, and then repeat on the other side for 15 counts.

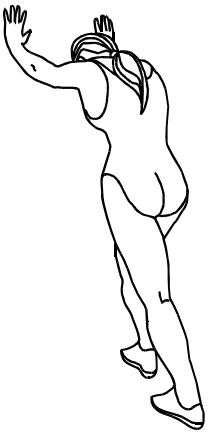

Limited Warranty

Limited Warranty – UK Only

This product is warranted to be free from defects in workmanship and material, under normal use and service conditions, for a period of (2) two years from the date of purchase. This warranty extends only to the original purchaser. This warranty is limited to replacing or repairing, at the Manufacturer's option, the product through one of its authorized service centers. All repairs for which warranty claims are made must be pre-authorized by the manufacturer. This warranty does not extend to any product or damage to the product caused by or attributed to freight damage, abuse, misuse, improper or abnormal usage or repairs not provided by an authorized service centre, products used for commercial or rental purposes, or products used as store display models. No other warranty beyond that specifically set forth above is authorized.

The Manufacturer is not responsible or liable for indirect, special or consequential damages arising out of or in connection with the use of performance of the product or damages with respect to any economic loss, loss of property, loss of revenues or profits, loss of enjoyment or use, costs of removal, installation or other consequential damages of whatsoever nature.

The warranty extended hereunder is in lieu of any and all other warranties and any implied warranties of merchantability or fitness for a particular purpose is limited in its scope and duration to the terms set forth within.

This warranty gives you specific legal rights.

HOW TO MAINTAIN THE AG-12301 TREADMILL

HOW TO MAINTAIN THE AG-12301 **TREADMILL**:

Proper maintenance is very important to ensure your treadmill is always in top working condition. Improper maintenance could cause damage or shorten the life of your treadmill and exceed the LIMITED WARRANTY coverage.

- **Important**: Never use abrasives or solvents to clean the treadmill. To prevent damage to the computer, keep liquids away and keep it out of direct sunlight.

- Inspect and tighten all parts of the treadmill regularly. Replace any worn parts immediately.

BELT ADJUSTMENT:

Belt adjustment and tension performs two functions: adjustment for tension and centering. The running belt has been adjusted properly at the factory. However transportation, uneven flooring or other unpredicted reasons could cause the belt to shift off center resulting in the belt rubbing with the plastic side rail or end caps and possibly causing damage. To adjust the belt back to it's proper position please follow the directions below:

- **Walking belt has shifted to the left**: First unplug the power cord from the surge protector. Using the hex key provided, turn the left rear roller adjustment bolt 1/4 turn in the clockwise direction. Plug the power cord back into the surge protector and run the treadmill at 2.5 mph. You should see the belt start to correct itself, moving back towards the center. Repeat the above procedure until the walking belt is centered. It may be necessary to set walking belt tension once you have completed this procedure if the belt feels like it is slipping while walking. Refer below to the "Walking belt slipping" instructions.

- **Walking belt has shifted to the right:** First unplug the power cord from the surge protector. Using the hex key provided, turn the right rear roller adjustment bolt 1/4 turn in the clockwise direction. Plug the power cord back into the surge protector and run the treadmill at 2.5 mph. You should see the belt start to correct itself, moving back towards the center. Repeat the above procedure until the walking belt is centered. It may be necessary to set walking belt tension once you have completed this procedure if the belt feels like it is slipping while walking. Refer below to the "Walking belt slipping" instructions.

- **Walking belt is slipping**: First unplug the power cord from the surge protector. Using the hex key provided, turn both the left and right rear roller adjustment bolts the same distance, usually a 1/4 turn in the clockwise direction. Plug the power cord back into the surge protector and run the treadmill at 2.5 mph. You should now walk on the belt to determine if the belt is still slipping. Repeat the above procedure until the walking belt is not slipping. The tension should be just tight enough not to slip.

1. **WARNING! Do not over tighten rollers! This will cause premature roller bearing failure!**

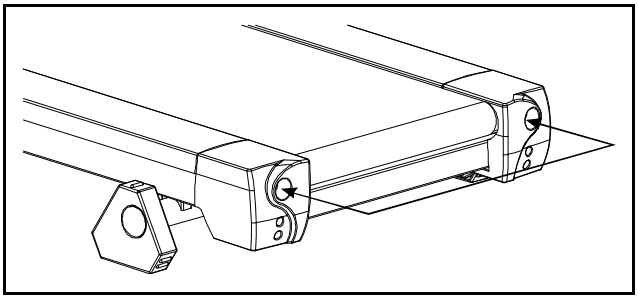

HOW TO MAINTAIN THE AG-12301 TREADMILL

CLEANING:

Routine cleaning of your treadmill will extend the product's life.

- **Warning**: To prevent electrical shock, be sure the power to the treadmill is OFF and the power cord is unplugged from the wall electrical outlet before attempting any cleaning or maintenance.
- **Important**: Never use abrasives or solvents to clean the treadmill. To prevent damage to the computer, keep liquids away and keep it out of direct sunlight.
- **After each workout**: Wipe off the console and other treadmill surfaces with a clean, water dampened soft cloth to remove excess perspiration.
- **Weekly**: Use of a treadmill mat is recommended for ease of cleaning. Dirt from your shoes contacts the belt and eventually makes it to underneath the treadmill. Vacuum underneath treadmill once a week.

DECK LUBRICATION:

The walking belt has been pre-lubricated at the factory. However, it is recommended that the walking board be checked periodically for lubrication to ensure optimal treadmill performance. Your treadmill should not have to be lubricated usually within the first 400 hours of use.

Every 2 months of operation lift the sides of the walking belt and feel the top surface of the walking board as far as you can reach. If you feel signs of silicone, no further lubrication is required. If it feels dry to the touch, follow the instructions below.

Please use 100% Silicon Oil to lubricate your treadmill deck.

To apply lubricant to the walking belt:

1. Position the walking belt so that the seam is located on top and in center of the walking board.
2. Insert the spray nozzle into the spray head of the lubricant can.
3. While lifting the side of the walking belt, position the spray nozzle between the walking belt and the board approximately 6" from the front of the treadmill. Apply the silicone spray to the walking board, moving from the front of the treadmill to the rear. Repeat this on the other side of the belt. Spray approximately 4 seconds on each side.

Allow the silicone to "set" for 1 minute before using the treadmill.

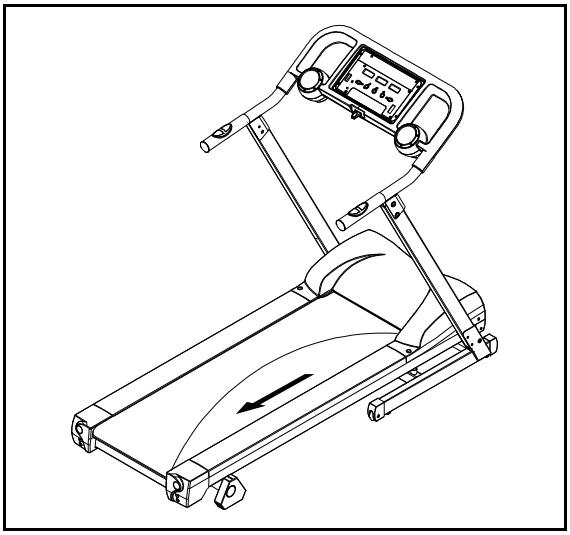

TROUBLESHOOTING

Troubleshooting

NOTE: Do not touch any internal electric wires without consulting the technical support team.

No display on the Computer LCD, after the power is switched on.

1. Make sure the power cord has been plugged in properly to the power switch on the base frame and mains power socket.
2. Make sure the safety key is inserted properly into the safety key slot on the console. Try pulling it in and out several times until the LCD lights up.
3. If there is still no power on the computer, call the technical support team for help.

Computer LCD lights up but the running belt has no movement.

1. Follow the console operating instructions for the P1 manual program then press the Start button to see if the belt will move. The belt should move at 0.8km/hour/0.5mile/hour.
2. If the belt still does not move, press the Speed Up button and see if the speed LCD window indicates the speed increasing. If you are still having difficulty please call the technical support team.
3. If when you press the speed button the speed LCD window indicates the speed increasing, but the belt still does not move please call the technical support team for help.

Computer LCD does not show the pulse.

1. First, please press the Start button to start the treadmill. Place both hands on the heat rate contact sensors on the handlebars. Then check if the LCD shows a blinking heart symbol. If the blinking heart symbol is displayed then the computer is sensoring your pulse properly. Keep your hands on the sensors until the actual pulse number is displayed on the LCD.
2. If when holding the contact sensors on the handlebars the heart symbol is not displayed, please disassemble the handlebars and check to make sure both sensor wires are assembled correctly. Disconnect and then reconnect them again. Then try the heart rate contacts again. If they still do not work properly, please call the technical support team for help.

Contact Number

If you have any other problems please call the following number:

UK TECHNICAL SUPPORT TEAM 0 845 600 0464

ORDERING REPLACEMENT PARTS

How to Order Replacement Parts

If you encounter any problems with the product, or need to order replacement parts, call our UK Customer Service Department on +44 (0) 845 600 0464. To help us assist you, please be prepared to give us the following information:

The Model Number of the product (AG-12301)
The Name of the product (SILVER MEDAL TREADMILL)
The Serial Number/Manufacturing Date of the product
The Description of the part(s)

rogerblack

SILVER TREADMILL **AG-12301**

User manual, 1st edition.

The rogerblack medal series comprises:

Platinum treadmill	AG-11303
Gold treadmill	AG-11302
Silver treadmill	AG-11301
Gold bike	AG-11203
Medal bike	AG-11201
Silver semi-recumbent bike	AG-11207
Gold cross-trainer	AG-11212
Silver cross-trainer	AG-11211
Gold rower	AG-11402
Silver maxi-rower	AG-11401

For information on the Roger Black Medal Series visit www.rogerblackfitness.co.uk

For technical support call the Roger Black Technical Support Line on 0845 600 0464, or email support@rogerblackfitness.co.uk